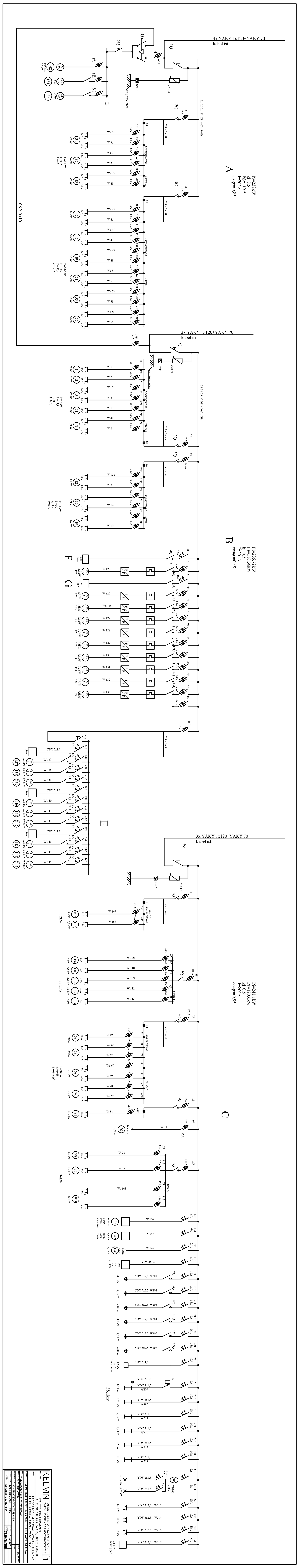
3x YAKY 1x120+YAKY 70
kabel ist.
A
B
C
E
F
G
KELVIN